NO. RBT134/50UXBP

SUPSDS.

QTY	PRODUCT	NEXT ASSY. DWG.	NO.	DESCRIPTION OF CHANGE	SCO	DATE	BY
				NEW ISSUE		07/22/15	DSE

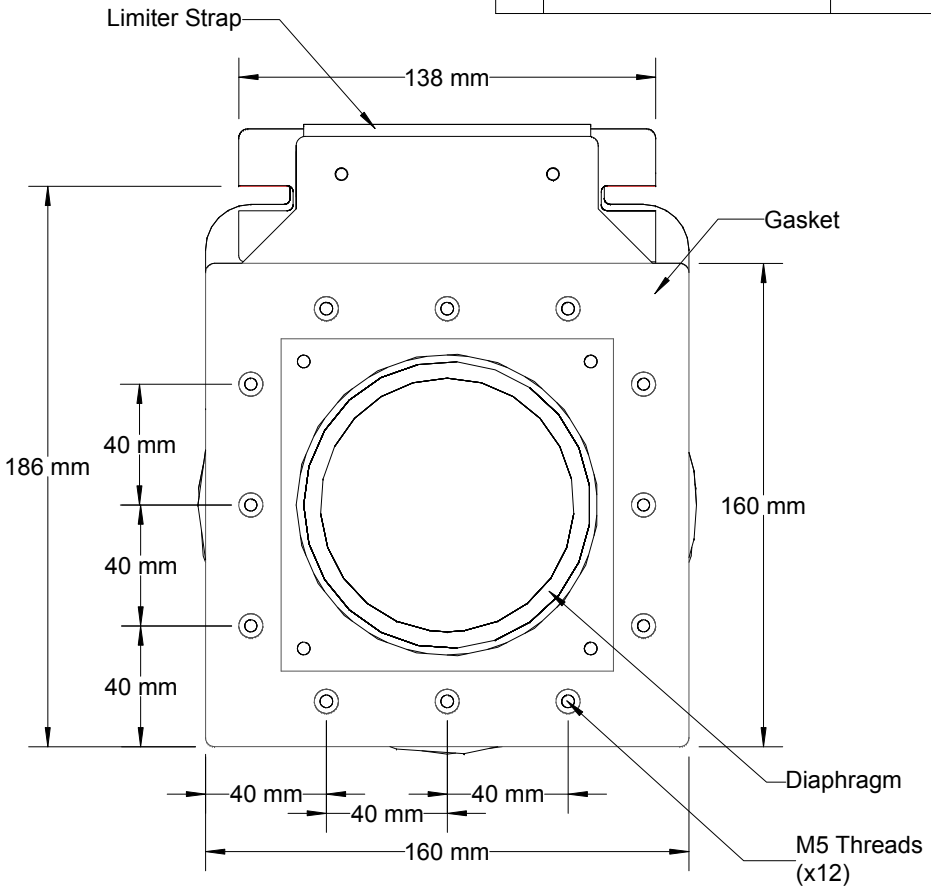

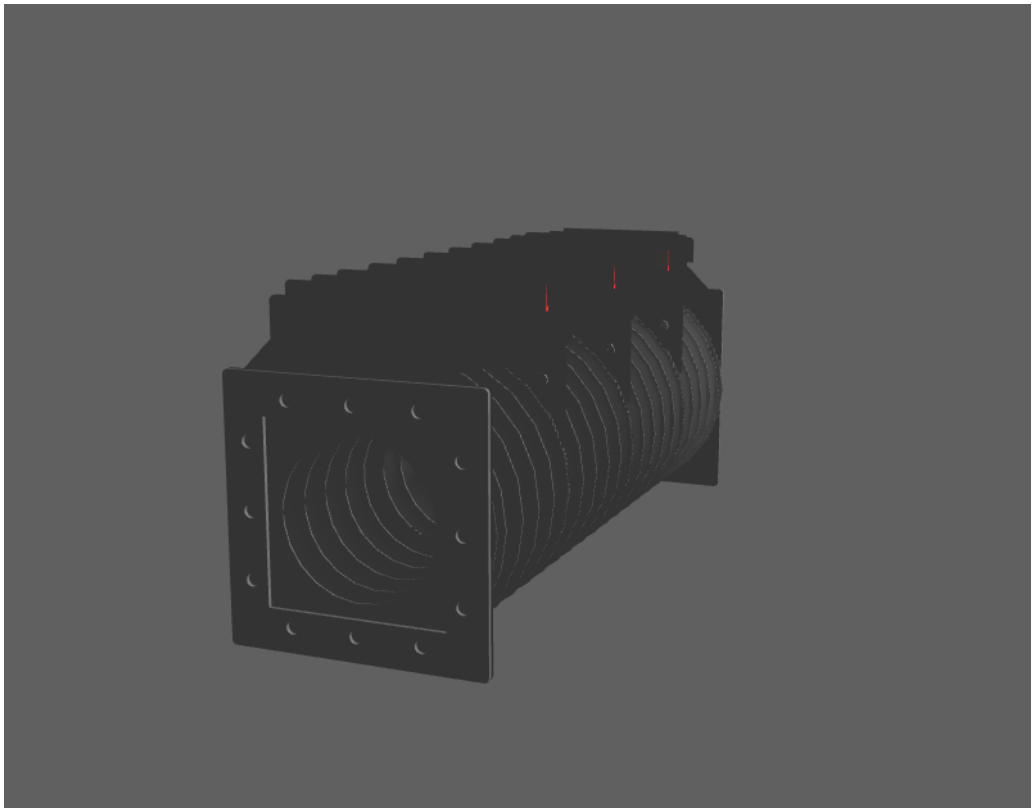

Notes:

1) Closed Length = 280 mm,
   Open length = 2750 mm

2) Hangers are made of PVC
   and have long life bearing
   guides.

3) Dimensions are for identification
   purposes only and not for inspection.

TOLERANCES UNLESS OTHERWISE SPECIFIED

FRACTIONS ±1/64 DECIMALS: .X ±.1 .XXX ±.005

ANGLES ±1/2° .XX ±.01 .XXXX ±.001

DO NOT SCALE DRAWING

DRAWN	DSE	SCALE	NTS
ENG. MGR.		ENG. CHKD.	
ENG. MGR.		PRODN. APPD.	
MAT'L			
MAT'L. SPEC. NO.			
FINISH		PROD.	

THIS DOCUMENT IS THE PROPERTY OF RICHARDSON ELECTRONICS, LTD. AND SHALL NOT BE COPIED, REPRODUCED, USED IN THE MANUFACTURE OR SALE OF APPARATUS OR DISCLOSED TO OTHERS WITHOUT PERMISSION.

Richardson Electronics, Ltd.

U & X BEAM PATH BELLOWS REPLACES TRUMPF P/N 1271514 (2004 & After)

NO. RBT134/50UXBP REV. — 0